3 Module

Design Data.
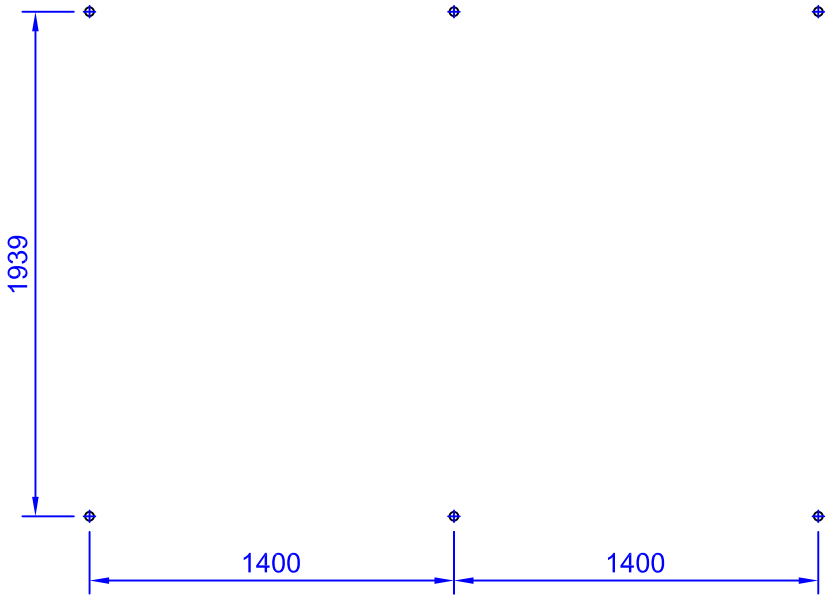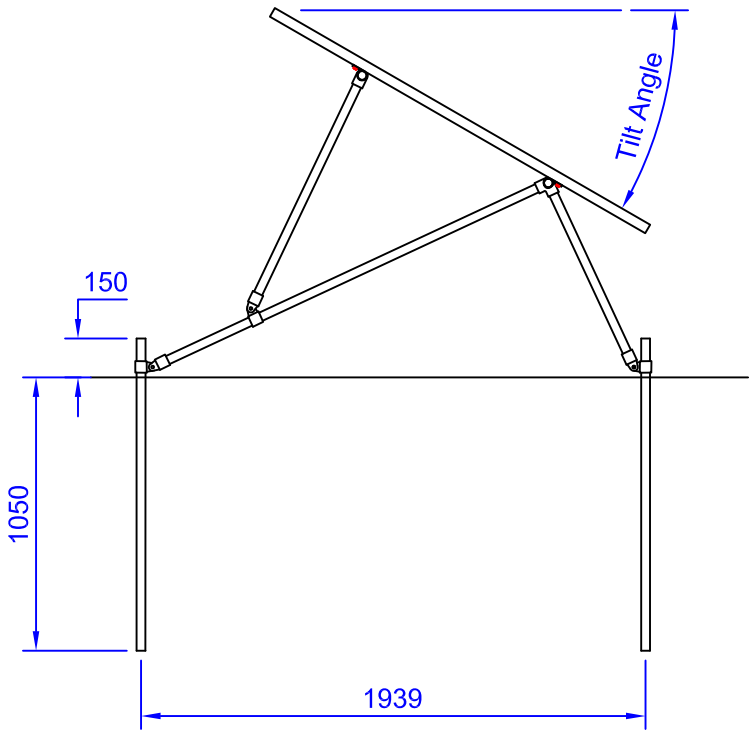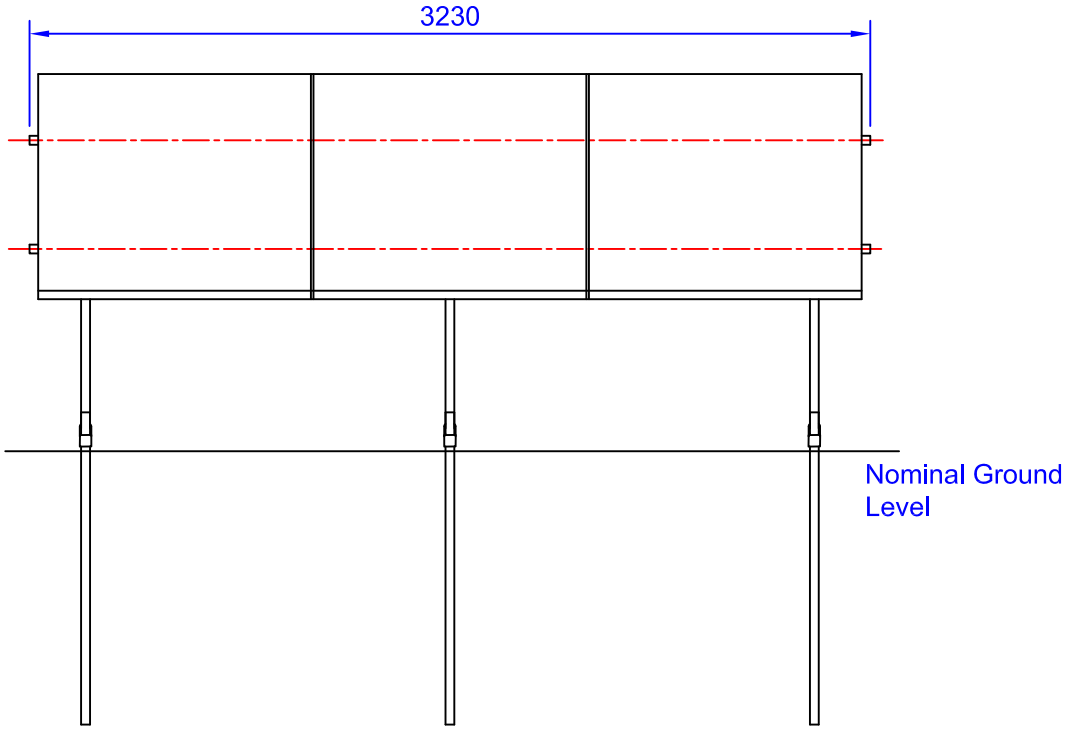
- Material: mild & Carbon steel
- Finish: Galvanised BS EN ISO1461
- Fasteners: A4 Stainless steel
- Mod, fixings: A4 stainless steel
- Wind loading: 40metres per second
- Foundation: Not Required